Frontplattenausschnitt (Rückseite)

Panel cut out (rear side)

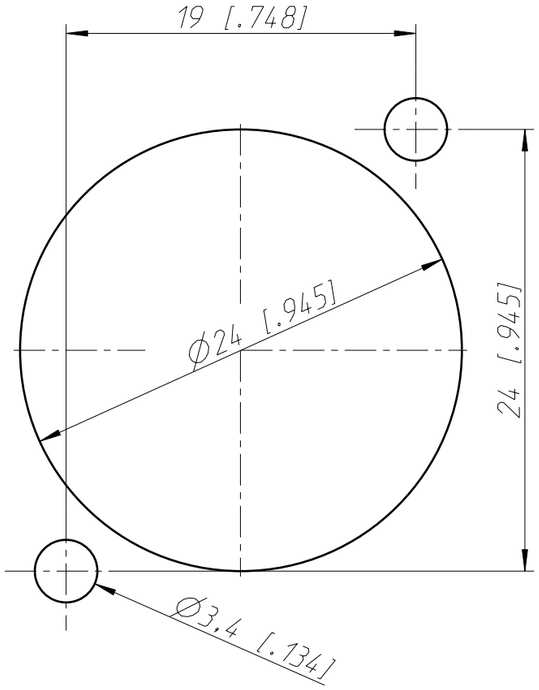

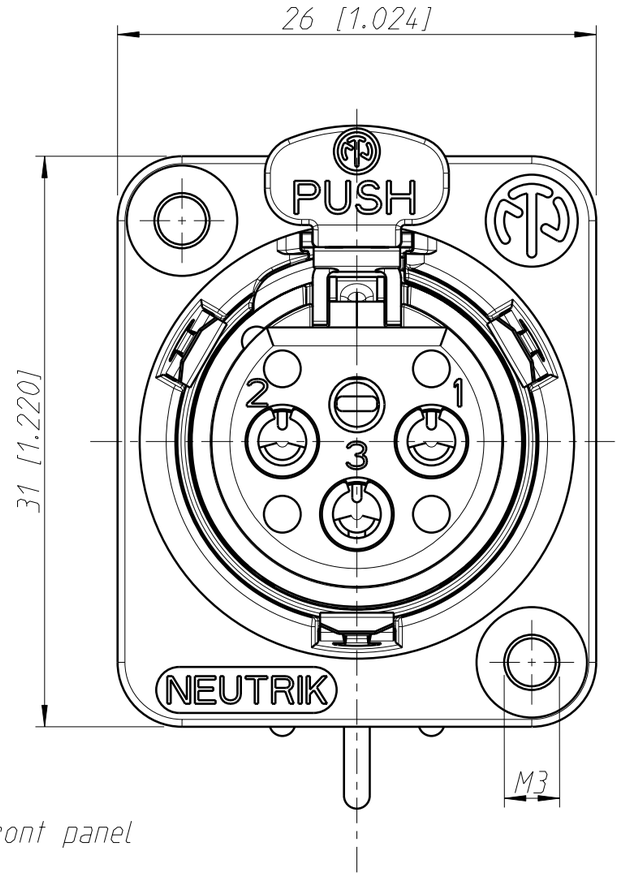

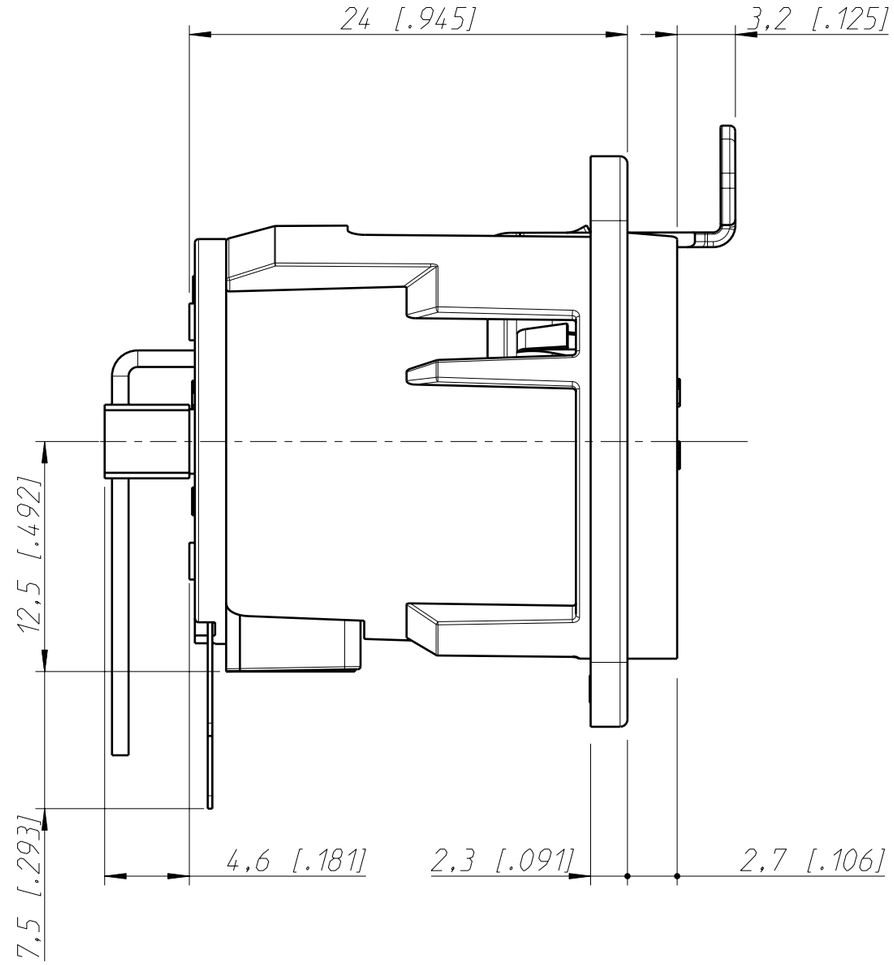

Print-Bohrplan (Bestückungsseite)

PCB-Layout (component side)

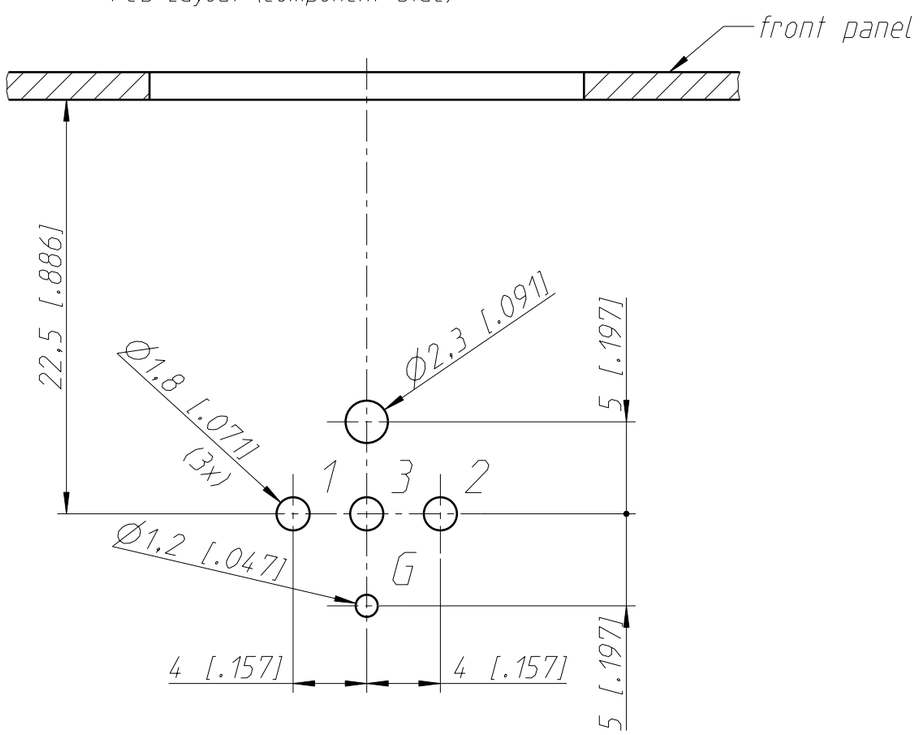

General tolerances ISO 2768-m	Scale		Date	Name
Refer to protection notice ISO 16016.	3:1 (A3)	Drawn	19.06.15	Dobler
Name		Modified	28.07.17	Hofmann
–		Change-No.	Sheet-No.	Index
NC3FDM3-H		-	1 / 1	C
		Replacement for:		
NEUTRIK		Drawing-No. ST-NC3FDM3-H		